Solomon Practice Paper

Pure Mathematics 1C

Time allowed: 90 **minutes**

Centre: **www.CasperYC.club**

Name:

Teacher:

Question	Points	Score
1	5	
2	6	
3	8	
4	9	
5	10	
6	10	
7	13	
8	14	
Total:	75	

How I can achieve better:

-
-
-

BY NC ND

Last updated: December 24, 2025

1. Find the set of values of x for which [5]

$$2x(x-9) < (3x+1)(x-5).$$

2. (a) Given that [3]

$$x = 2^p \quad \text{and} \quad y = 2^{5p+1}$$

express each of the following in the form 2^m, where m is a function of p:

i. xy

ii. $8x^2$

(b) Hence find the value of p for which [3]

$$8x^2 - xy = 0.$$

Total: 6

3. (a) Prove that the sum, S_n, of the first n terms of a geometric series with first term a and common ratio r is given by [4]

$$S_n = \frac{a(r^n - 1)}{r - 1}.$$

(b) Hence evaluate [4]

$$\sum_{r=1}^{12} 3^r.$$

Total: 8

4. Figure shows the curve $x = 12 + 4y - y^2$

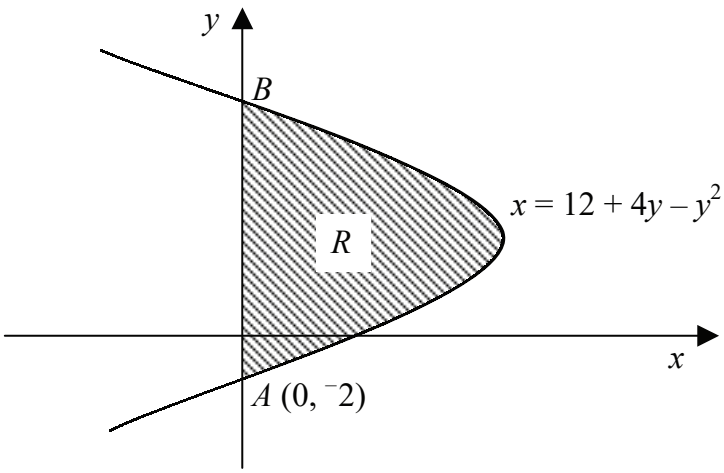

which crosses the y-axis at the point $A(0, -2)$ and at the point B.

(a) Find the coordinates of the point B. [3]

(b) Find $\int 12 + 4y - y^2 \, dy$. [3]

(c) Hence find the area of the shaded region, R, enclosed by the curve and the y-axis. [3]

Total: 9

5. (a) Find, giving your answers in terms of π, all values of θ in the interval $0 \leq \theta \leq 2\pi$ for which [4]

$$\tan\left(\theta - \frac{\pi}{4}\right) = \sqrt{3}.$$

(b) Find, giving your answers correct to 1 decimal place, all values of x in the interval $0 \leq x \leq 180°$ for which [6]

$$\sin^2(2x) = 0.64.$$

Total: 10

6. The line l passes through the points $A(5, \sqrt{2})$ and $B(k, 4 + 3\sqrt{2})$ and has gradient $2\sqrt{2}$.

   (a) Find an equation of the line l. [2]

   (b) Show that $k = 6 + \sqrt{2}$. [4]

   Given also that B is the mid-point of AC,

   (c) find the coordinates of the point C. [4]

Total: 10

7.

$$\mathrm{f}(x) \equiv x^3 + ax^2 + bx - 24.$$

Given that $(x+2)$ and $(x-3)$ are factors of $\mathrm{f}(x)$,

(a) show that $a = 3$ and $b = -10$, [5]

(b) factorise $\mathrm{f}(x)$ completely and solve the equation $\mathrm{f}(x) = 0$, [4]

(c) find $\mathrm{f}'(x)$ and solve the equation $\mathrm{f}'(x) = 0$, giving your answers correct to 2 decimal places. [4]

Total: 13

8. Figure shows the design for a ramp.

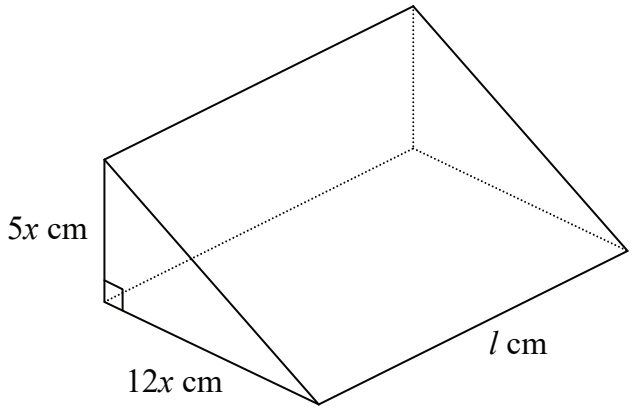

The shape of the ramp is a prism whose cross-section is a right-angled triangle of base $12x$ cm and height $5x$ cm. The length of the prism perpendicular to this cross-section is l cm.

The volume of the prism is to be 240000 cm^3.

(a) Show that l can be expressed as [2]

$$l = \frac{8000}{x^2}.$$

(b) Hence show that the surface area, A cm^2, can be written as [5]

$$A = 60x^2 + \frac{240,000}{x}.$$

Given that x can vary,

(c) use calculus to find the minimum value of A, [5]

(d) justify that the value that you have found is a minimum. [2]

Total: 14